ADB
Airfield Solutions

IES AVIATION LIGHTING COMMITTEE

ILLUMINATING ENGINEERING SOCIETY OF NORTH AMERICA
ANNUAL AVIATION LIGHTING CONFERENCE
October 16, 2012
St. Pete Beach, Florida

Optimized LED Architecture based on a Parallel Circuit

Airfield. Our Field.

Bruno Urbaing
Product Manager

Overview

- Technical information
  - The usual 6.6A architecture
  - The Parallel LED circuit
  - Components of the system
- Installation at PARIS CDG
  - General presentation of Paris CDG
  - AGL functions covered – quantities
- Analysis

©2012 ADB Airfield Solutions, LLC. All Rights Reserved

New AGL circuit concept

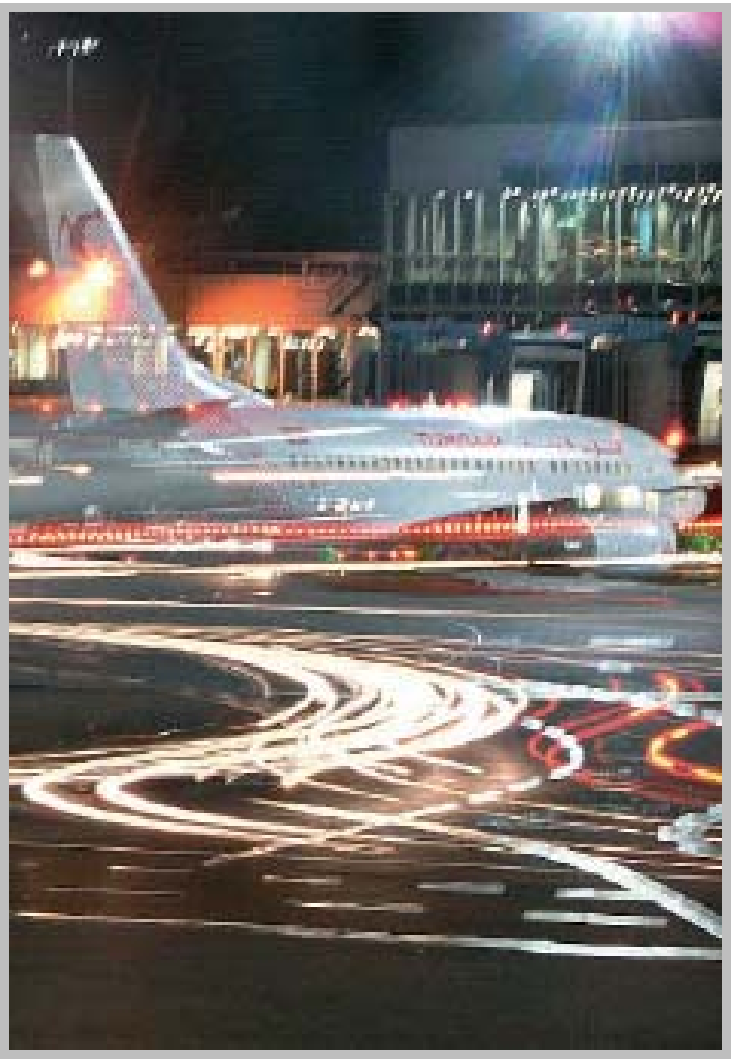

- 6.6A series architecture designed for incandescent lamps
- First LED applications: had to be compatible with existing infrastructure as part of the safety case
- But this situation is far from optimal

New AGL circuit concept

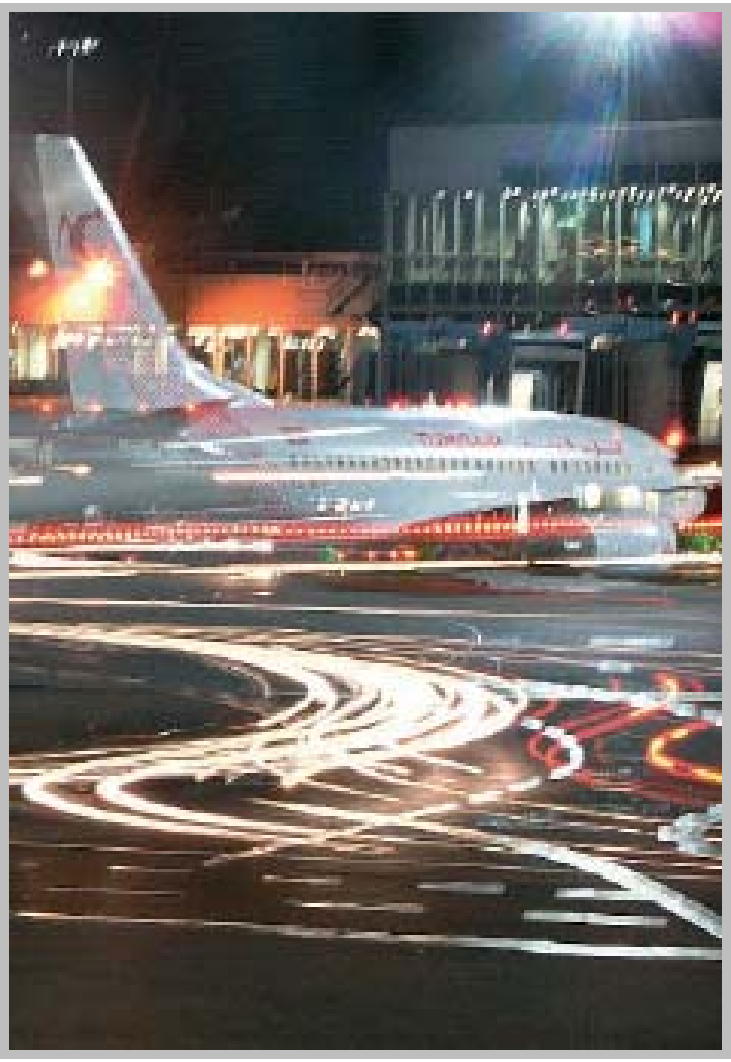

The time is right to look further : a new approach for the complete AGL concept. From the lights, up to the power supply.

- Less is more, and better!
  - Less components
  - Reduction in power consumption
  - More functionalities
  - Better – distributed intelligence

- Potential possibilities:
  - PWM series circuit?
  - Parallel supply?
  - … ?

New AGL circuit concept

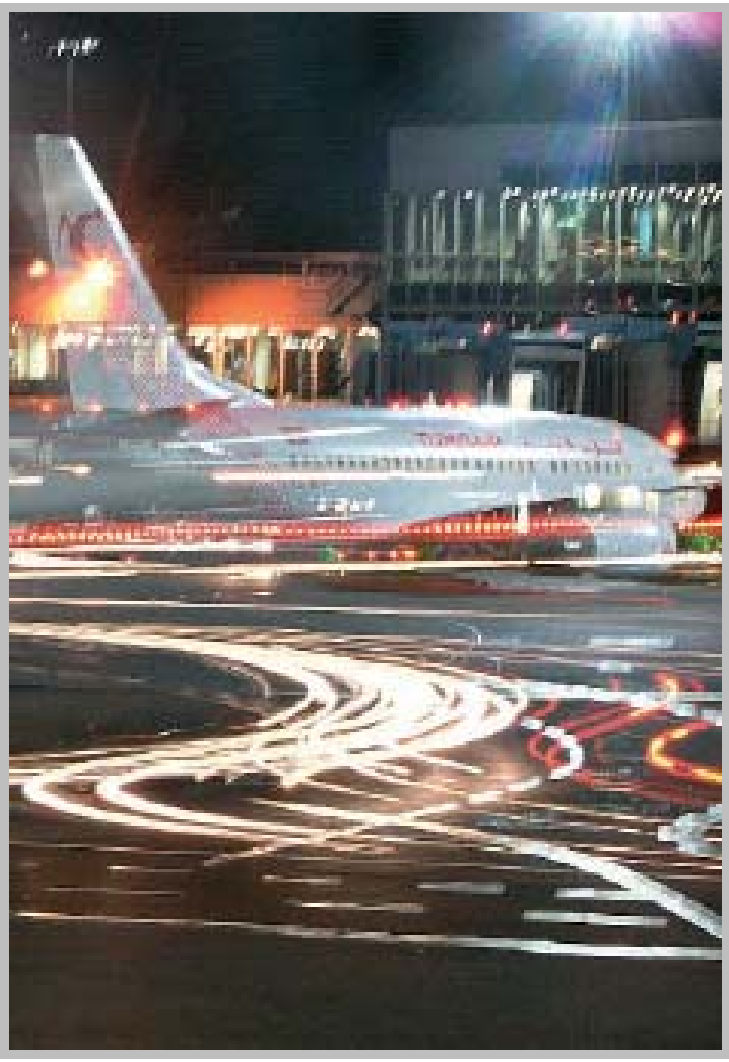

Many criteria, with a different weight for each airport:

- Initial cost
- Maintenance costs
- Energy consumption
- Individual communication
- Length of circuits, type and number of fixtures

Question is complex, and cannot be solved by purely theoretical theories.

Usual 6.6A LED architecture

Usual 6.6A LED Architecture

- CCR provides stabilized current (2.8 – 6.6A)

- In the light:
  - Over voltage protection
  - Energy storage
  - Current measurement

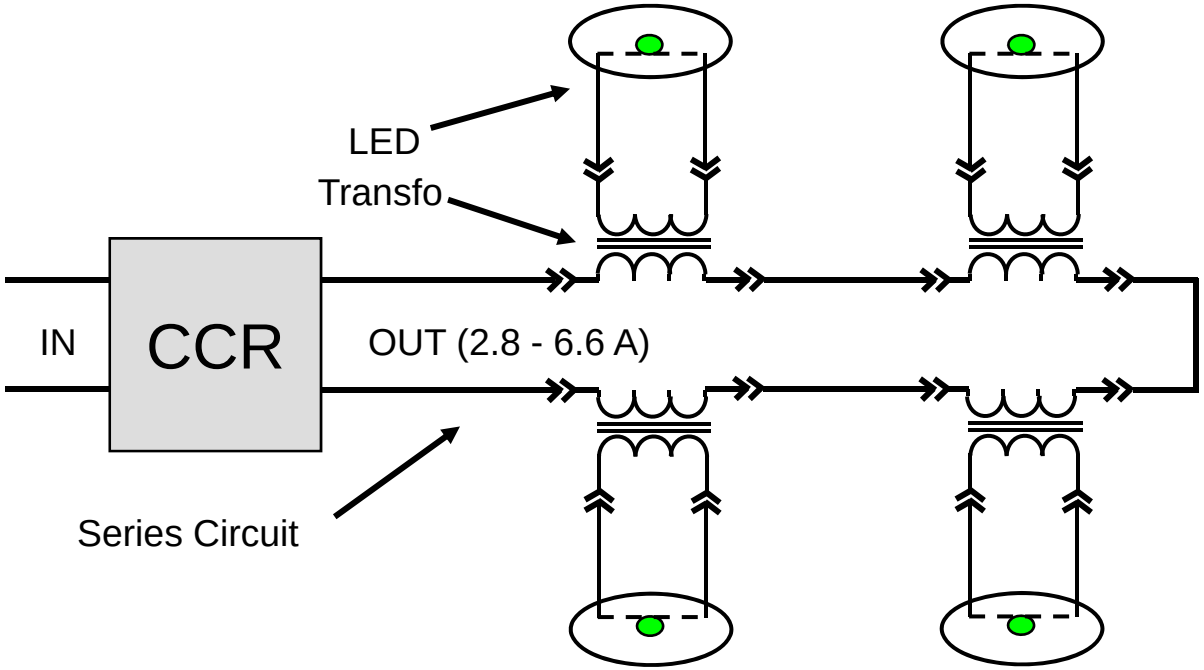

Electrical design - dimming

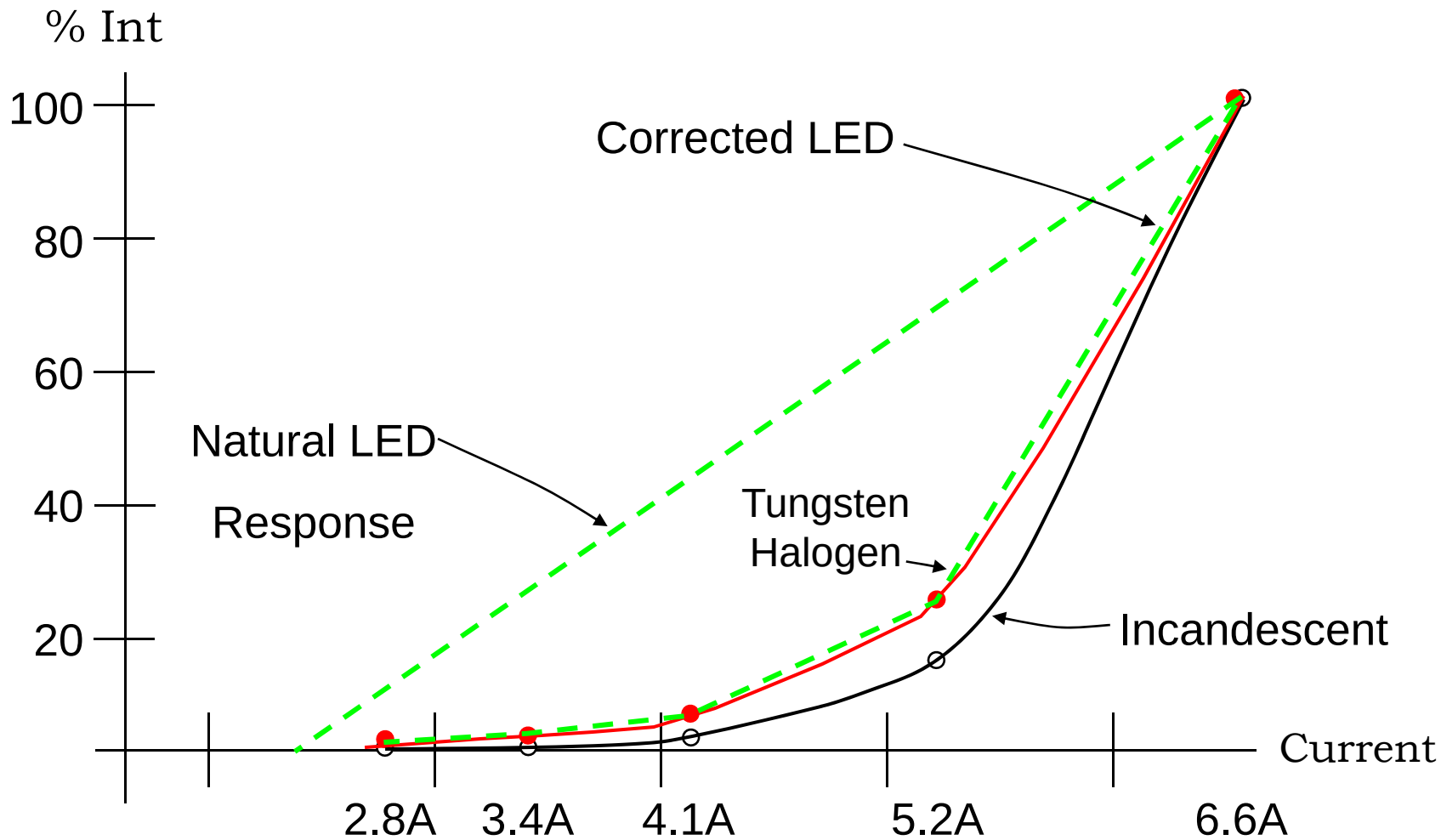

Usual 6.6A LED Architecture

- CCR provides stabilized current (2.8 – 6.6A)

- In the light:
  - Over voltage protection
  - Energy storage
  - Current measurement
  - Stabilized DC voltage and current generation
  - PWM to obtain the right brightness step

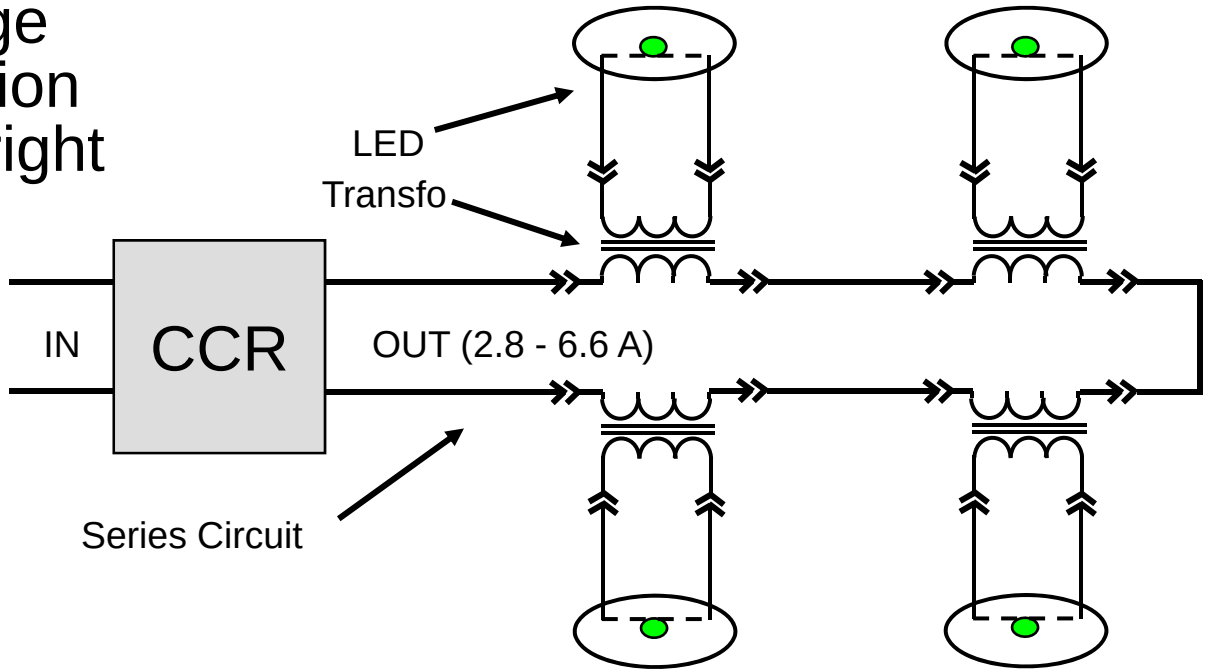

Usual 6.6A LED Architecture

- Advantages
  - Can be retrofit into existing circuits
  - Maintenance familiarity with series circuits
  - Proven to be adaptable for all operational requirements – heaters, individual control, failed fixture monitoring

- Disadvantages
  - Circuit complexity (& fixture cost)
  - Accurate current control in the CCR, with a second current control in the light
  - Cost

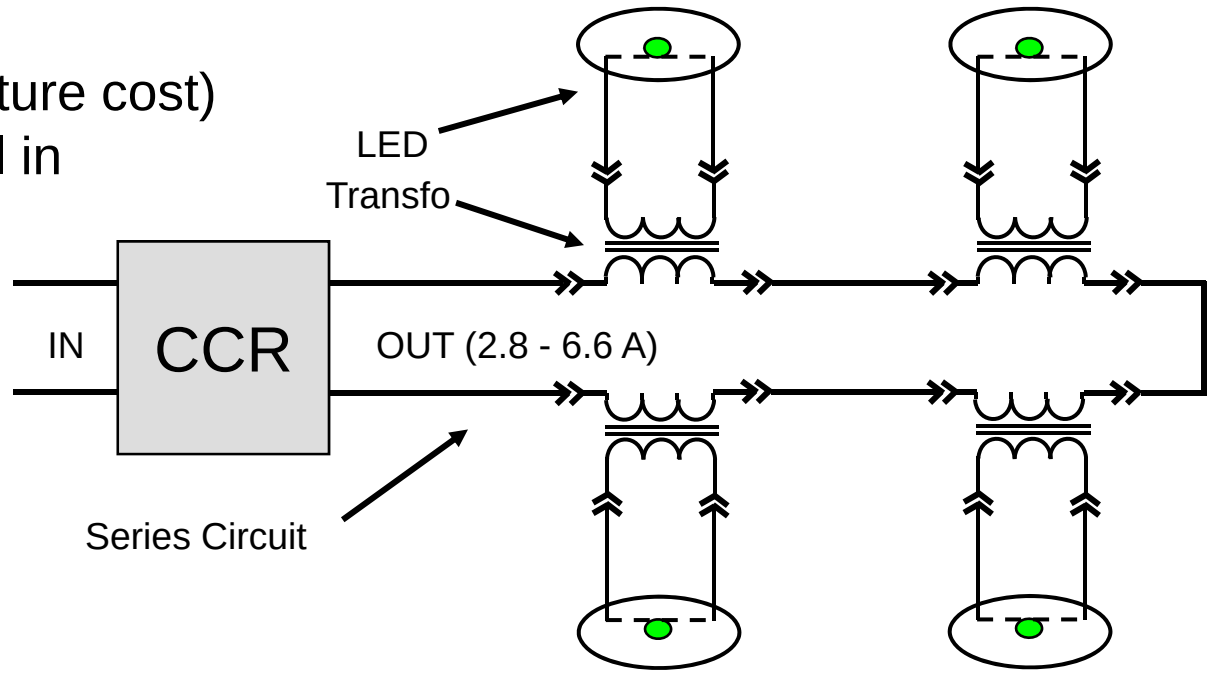

Usual 6.6A LED Architecture

- Disadvantages (continued)
  - Overall system efficiency not optimal due to circuit complexity (losses in CCR, transfo & fixture)
  - Safety- Still a HV circuit
  - Individual control is far from optimal:
    - Communication on the series loop
    - Need for a Remote unit at each light

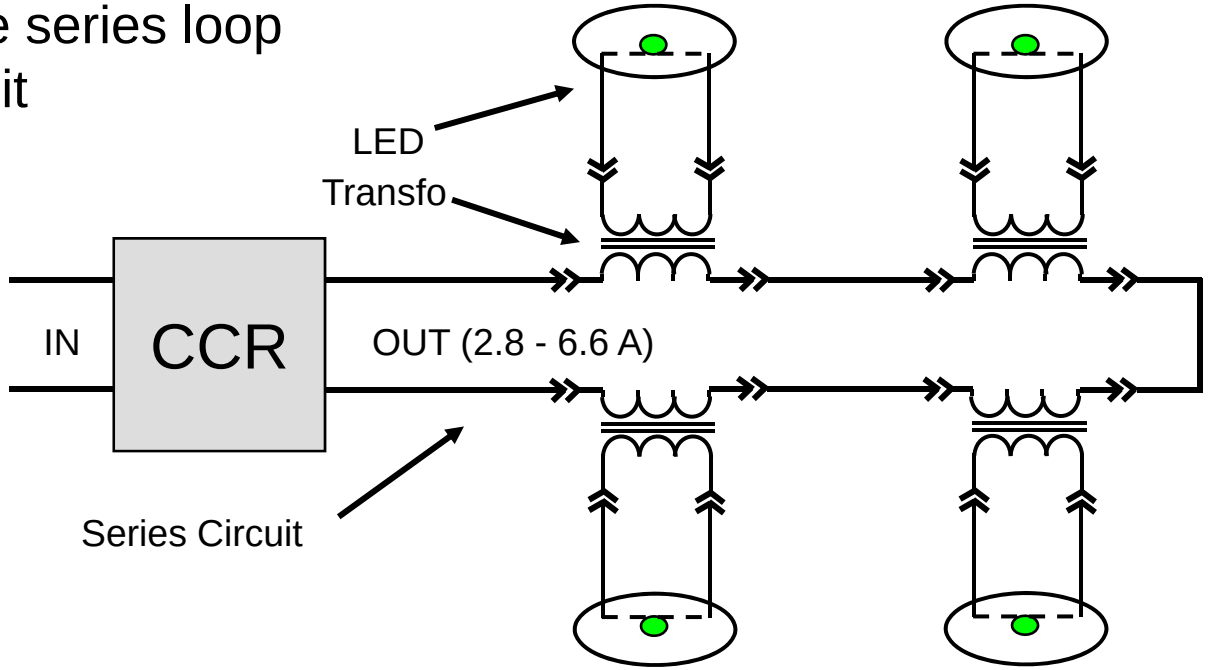

Possible options

Two routes are possible:

Simple:

Series circuit, with PWM current directly useable by the lights
No communication

Functional:

Parallel circuit, with fixed voltage
Communication to the lights, for on/off, brightness and feedback

Applications:

Short circuits
Re-use of existing cables
No individual communication

Applications:

Long circuits, mix of various types of lights
Selective switching, monitoring

Parallel LED Circuit

Parallel LED Circuit

A Sinewave Voltage adapter (the PPC) outputs a low voltage sinusoidal waveform onto which a control signal is added for on/off and brightness control to all lights

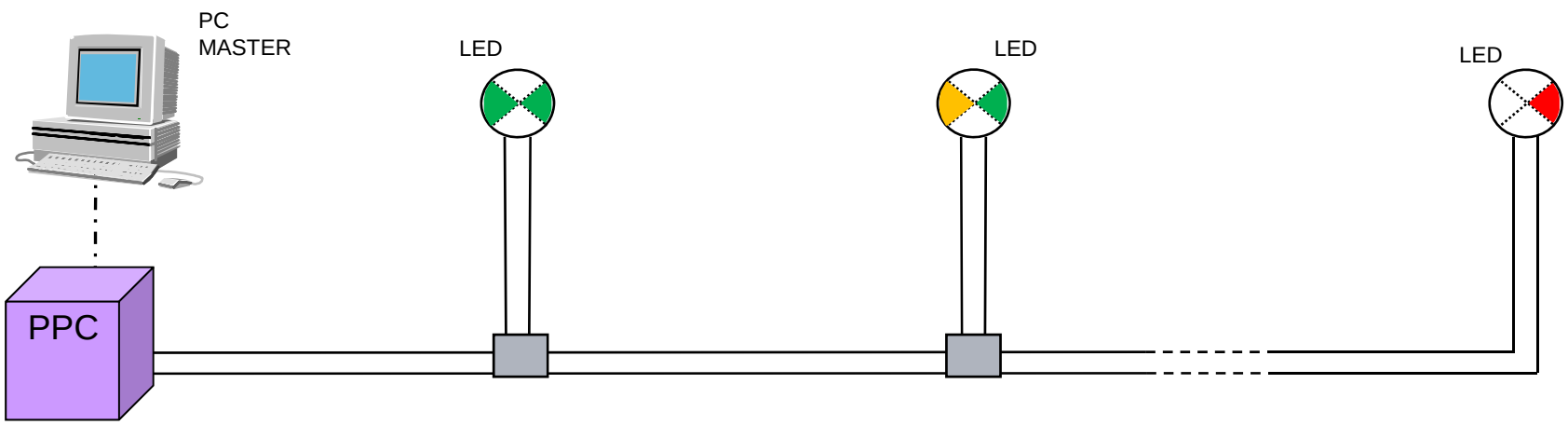

Architecture

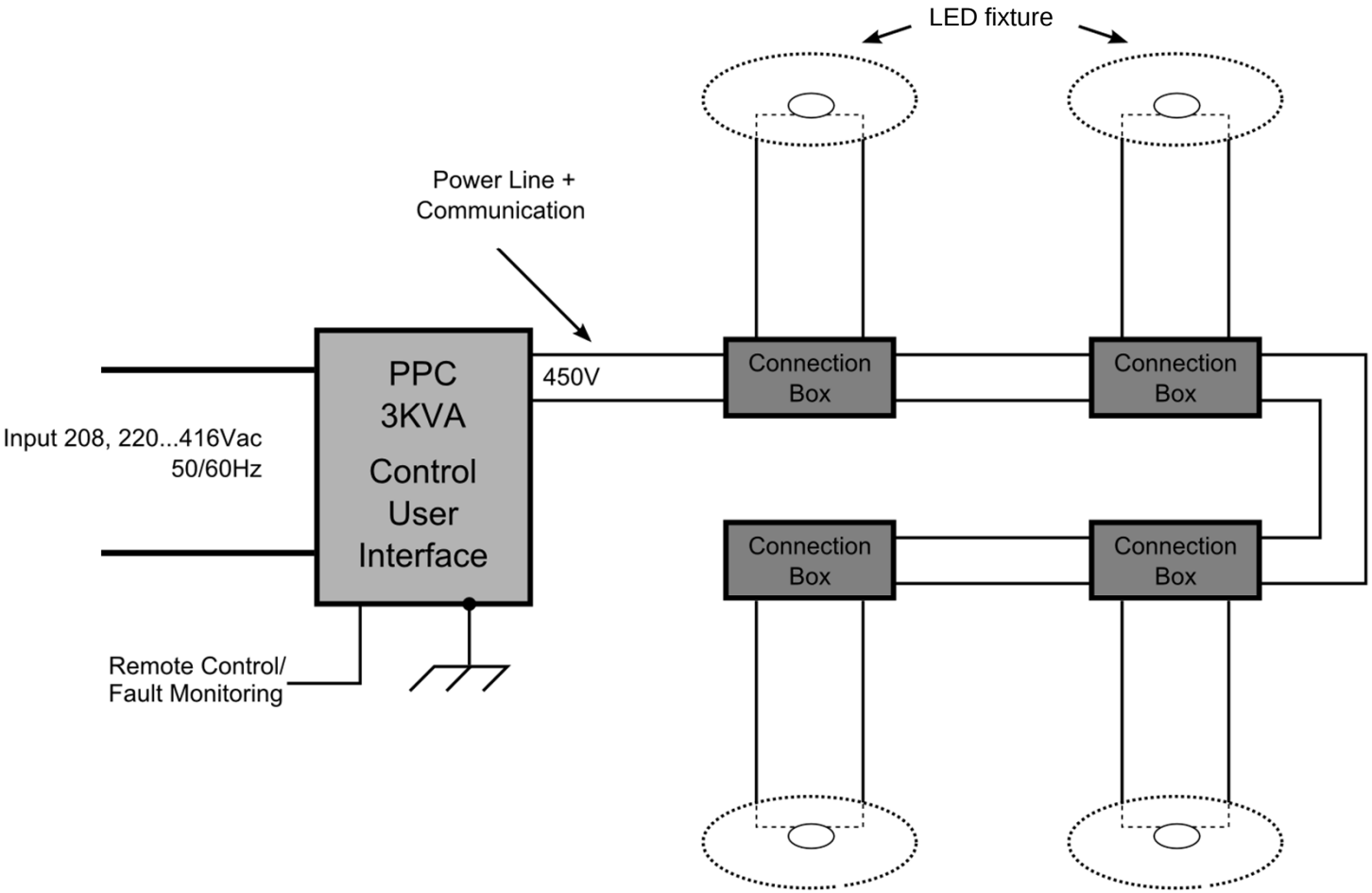

System components

System components

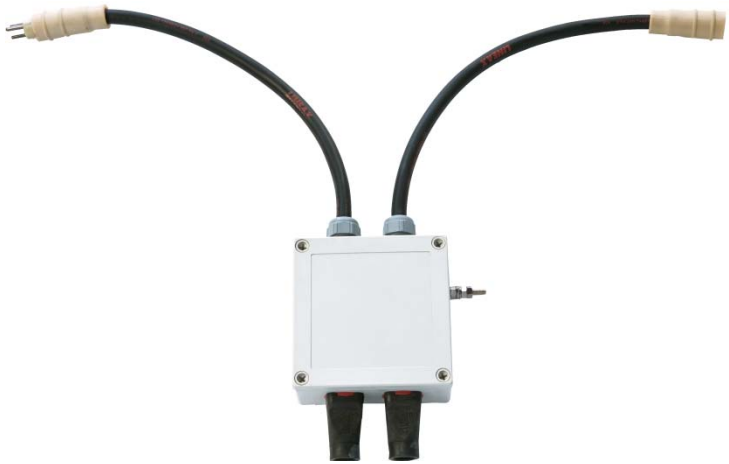

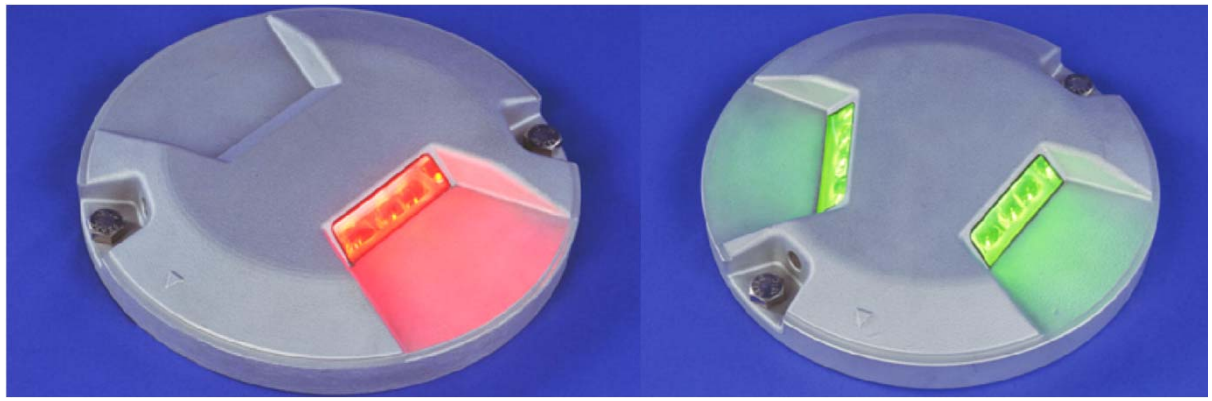

The PPC

Parallel
Power and
Communication Unit

The PPC

- Input voltage: 230 or 400V, 50 or 60Hz
- Output Voltage: 450VAC, floating toward ground
- Nominal Power: 3kVA
- Automatic megging capability (EFD), failed fixture monitoring (LFD)
- Over current protection (input and output)
- Remote control by multiwire orJ-Bus (single or redundant)
- HMI

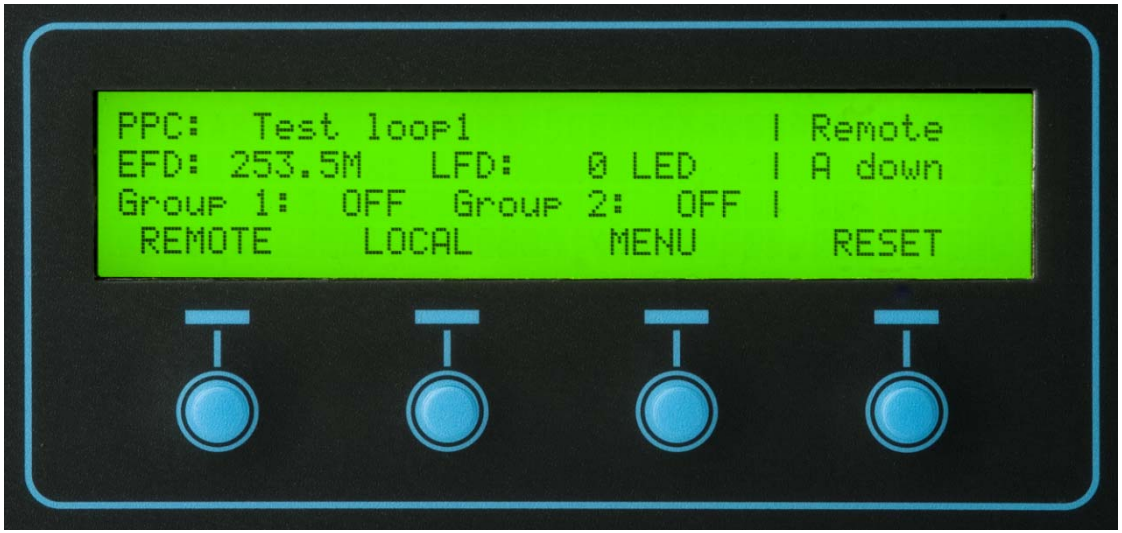

The PPC

- Includes master card for individual communication to the lights
- Up to 123 lights per circuit
- Up to 15 independently controlled groups of lights
  - On/off
  - Brightness level
- Individual monitoring of the status of the light

- Dimensions 400 x 600 x 1085 mm
- Weight 83 kg

System components

LPS/LPC

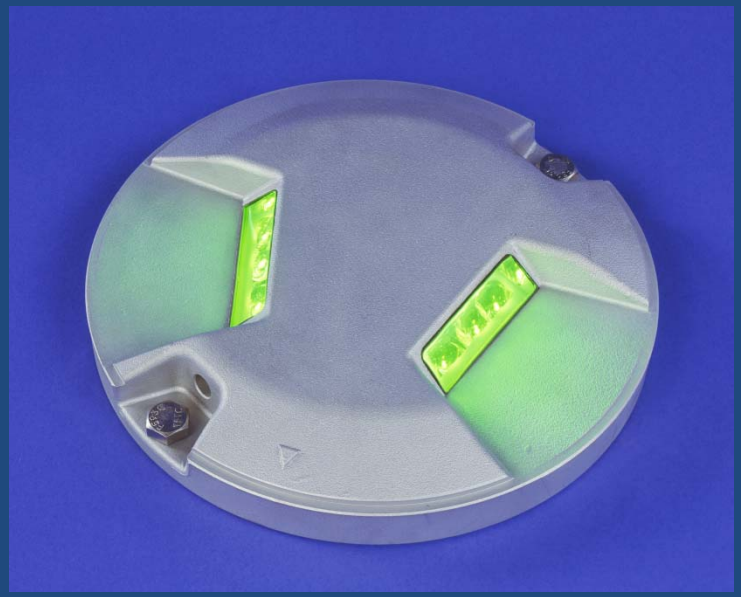

Led
Parallel
Straight (or Curved) Light

The LPS/LPC light

- Derived from the LTS/LTC taxiway centerline and stop bar light

- 8”, installed on shallow base
- Uni- or bidirectional; green, yellow, red
- Full compliance to ICAO Annex 14

- Input voltage 360-450VAC
  (Wide range insures proper operation even with voltage reduction along the length of the circuit)

- Max. power consumption lower than 20W (bidirectional fixture)

The LPS/LPC light

- Includes communication module. On/Off and brightness determined by PPC command
  In Paris:
  - Step 1: 0.09%
  - Step 2: 0.85%
  - Step 3: 5.83%
  - Step 4: 26.66%
  - Step 5: 94.53%

  (easily modifiable by software)

- No influence from the input voltage

- Continuous monitoring of the status of the light (LEDs + electronics) and feedback to the PPC

System components

CB

Connection Box

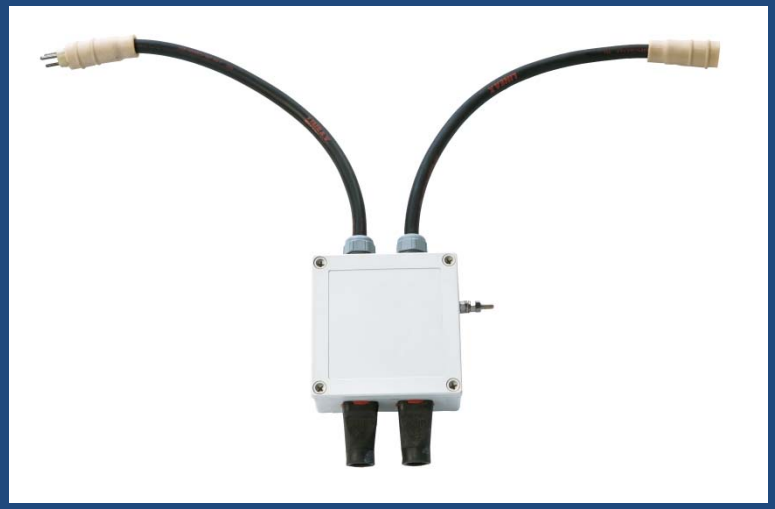

The Connection Box

- Watertight device (IP67) to connect one or two LPS/LPC light units to the main trunk

- New generation 3-pole connector (based on L-823)
  - To avoid confusion in the field, this connector is specific to the parallel system
  - “Main trunk” connectors are white

- Over current protection (prevention of full circuit down due to light unit failure)

The “Main trunk” cable

- Cable is standard 3-core cable: HO7RN-F, 3G4 (approx. AWG 11)
  (same cable is used between the CB and the light)

- Thicker section may be used for long home runs, in order to reduce losses in the cable

- An algorithm allows calculating the allowable number of lights in function of the configuration (the voltage at the last light is the criterion)

- “Tree” configuration possible (e.g. apron):

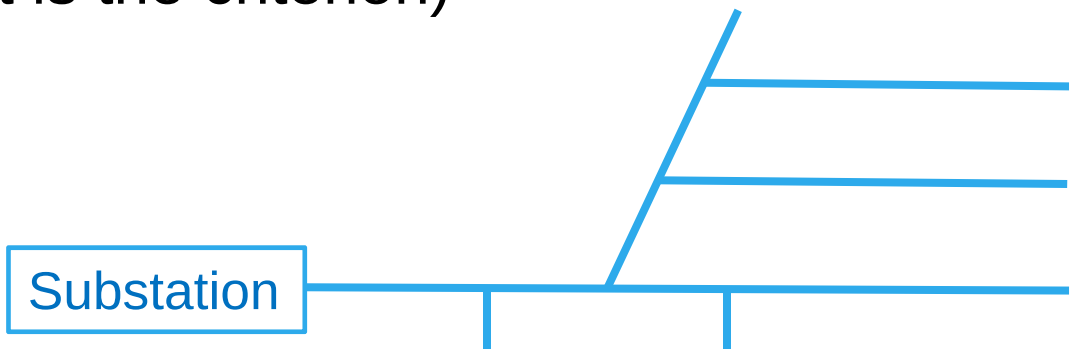

installation at Paris CDG

AIRPORT TRAFFIC CONDITIONS

- **Annual traffic (year 2008) :** ~ 500 000 ops & ~ 60 MPAX
- **Rank for ops :**

  n° 8 in the world, n° 1 in Europe
- **Rank for passengers :**

  n° 5 in the world, n° 2 in Europe.
- **Peaks in ops : Peak day :** 1773 ops - Peak hour : 141 ops.
- **Major HUB** for AIR-FRANCE/KLM.
- **About 200 foreign airlines operating at CDG.**
- **Weather conditions:**

  •Low Visibility Procedures (LVP) less than 4% of time.
  •A few snowy days**.**

Paris CDG

AIRPORT LAYOUT

- **Surface area :** 3200 Ha
- **4 E-W parallel RWYs:**
  - **north pair –** 09R(L)/27L(R)
  - **south pair –** 08L(R)/26R(L)

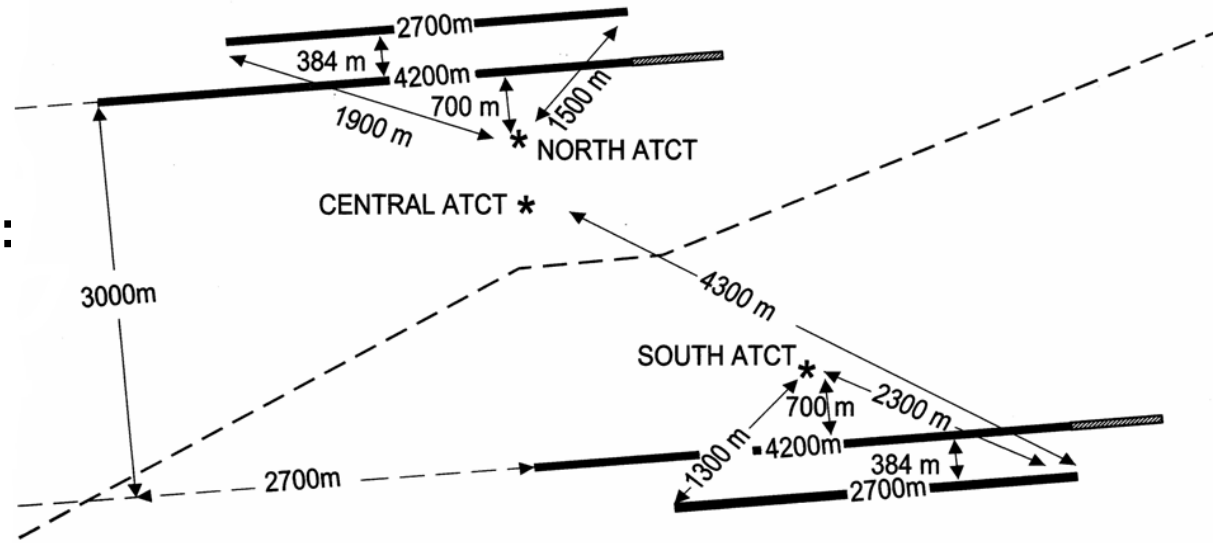

- **Taxiways :** about 80 km in all**.**
- **2 sets of holding points:**
  - **CAT 1 holding points** located at 90 m from RWY centerline
  - **CAT 2/3 holding points** located at 150 m from RWY centerline
- A lot of improvements done to **reinforce CAT1 holding points….**

CDG GLOBAL BASIC OPERATIONS

- **Arrivals on outer RWYs**
- **Departures on inner RWYs**
- **Arrival intersects take off multiple line-ups**

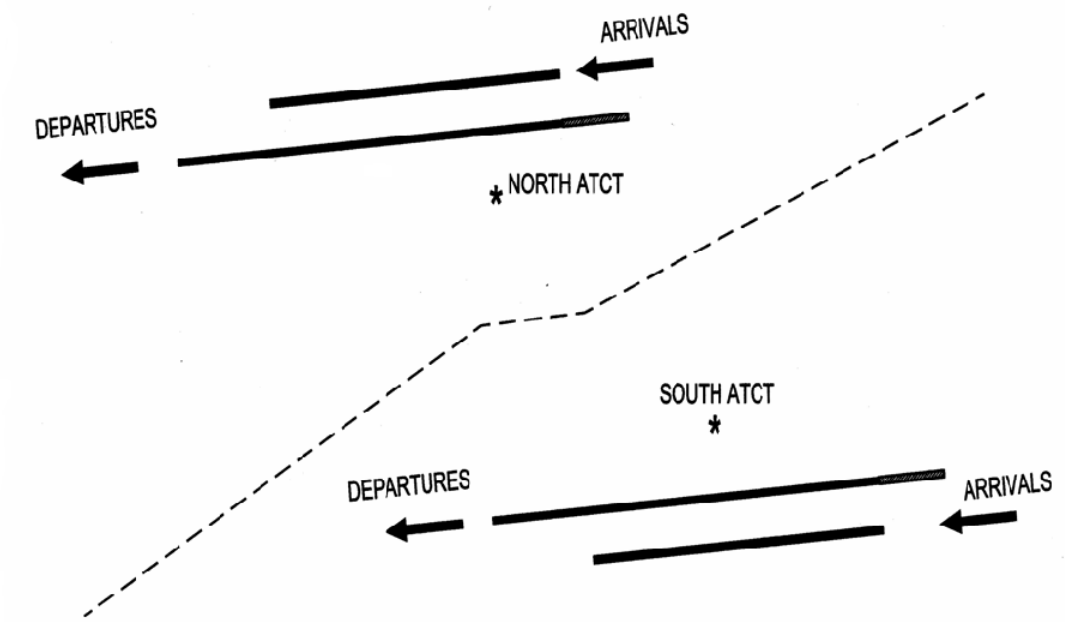

- **More than 250 000 arrivals per year crossing departure RWYs**

CDG BASIC OPERATIONS ON THE PAIRS : West flow

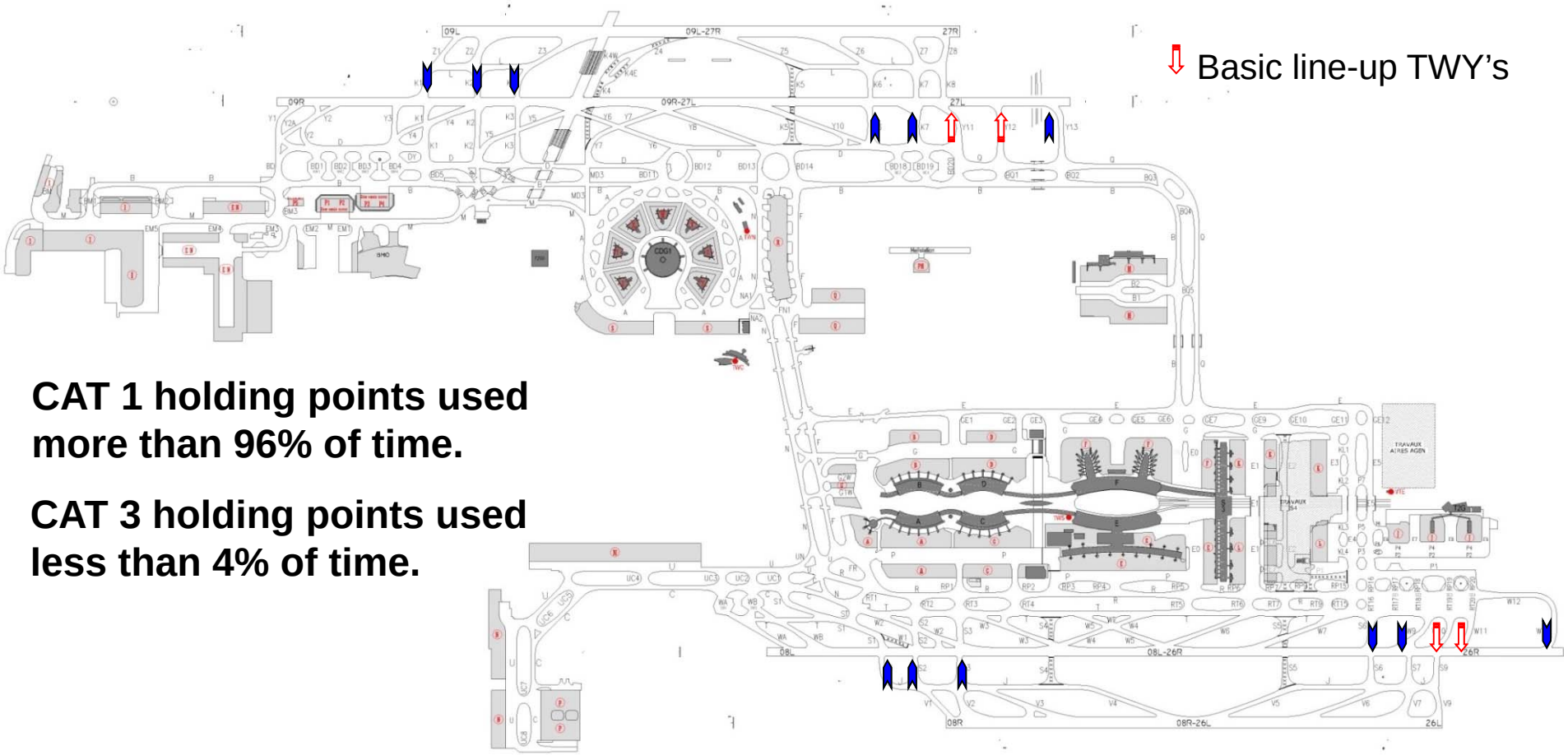

⇩ Basic line-up TWY's

CAT 1 holding points used more than 96% of time.

CAT 3 holding points used less than 4% of time.

AIRPORT EQUIPMENT

A-SMGCS Level 2 in service since 2003

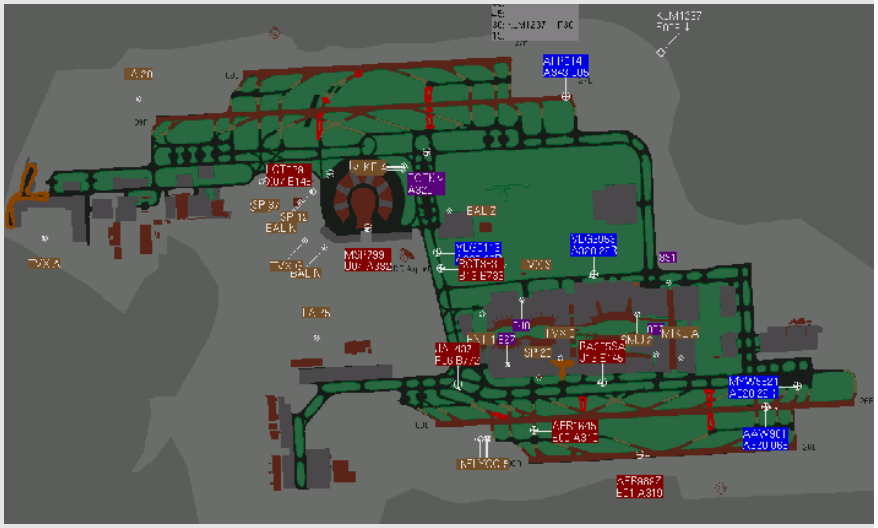

✓4 Surface Movement Radars.

✓Mode S Multi-lateration (18 antennas).

✓Vehicle surveillance via GPS (CAPRICORN).

✓Safety net (Runway Conflict Alert/Collision Avoidance System : RIMCAS).

AIRPORT EQUIPMENT

STOP BARS

- ✓In service only when LVP are in progress (less than 4 % of time).
- ✓Installed at CAT 3 holding points, located at 150m from RWY centerline.
- ✓34 controlled stop bars (a local controller has to manage 6/7 stop bars).

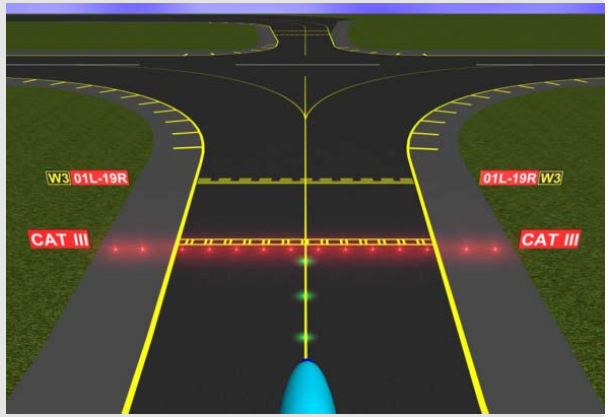

STOP BARS AT CDG AIRPORT

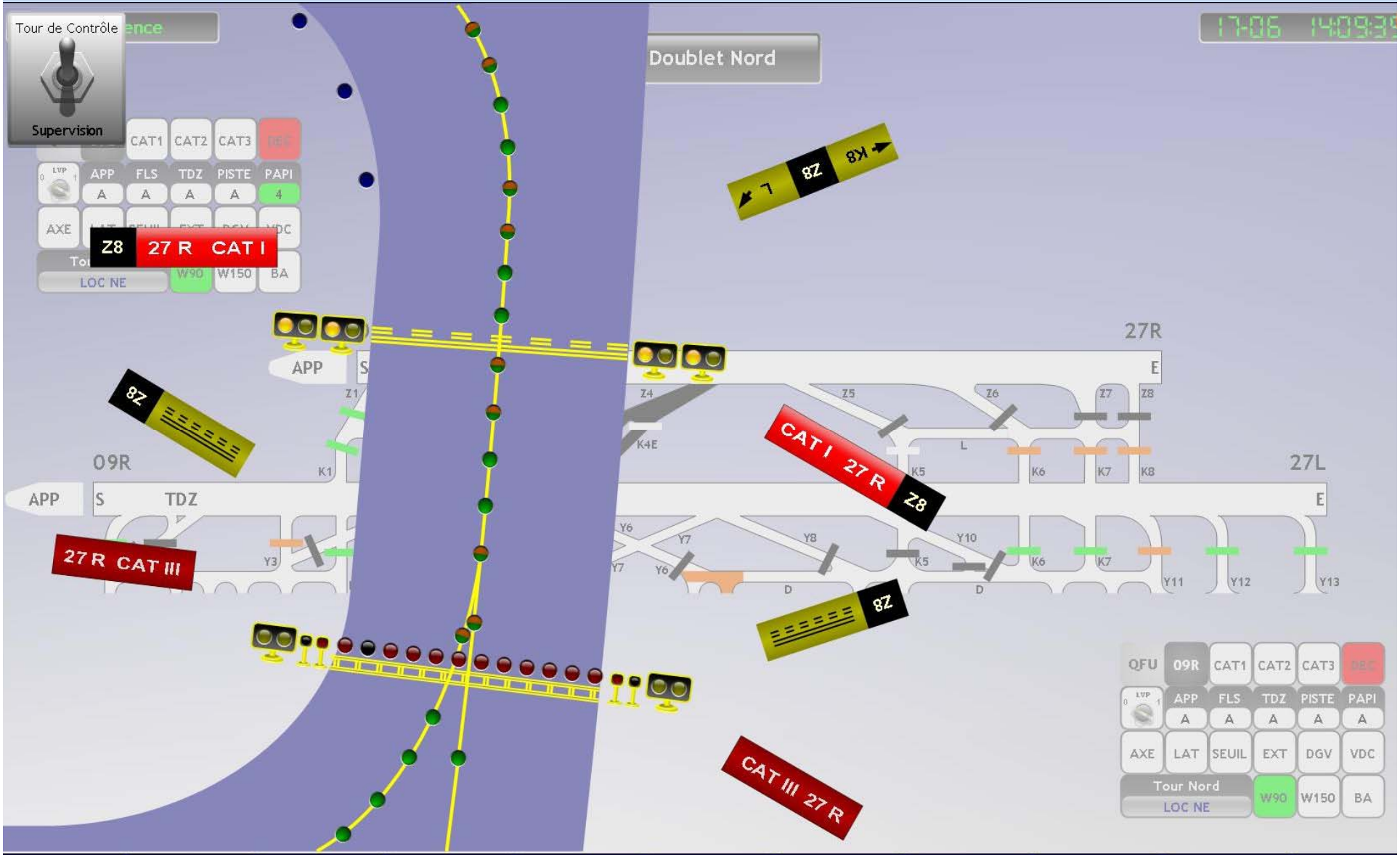

RUNWAY INCURSIONS

- **Number of runway incursions**
  - About 30 per year, including 3 to 5 (A+B)
  - Most of them in CAT1 (or above) conditions
  - 75 % on the two inner runways
- **Preparing for traffic increase while maintaining or improving safety level**
  - Potential increase in annual traffic of about 50/60%
- **Need to decrease, as soon as possible, all types of runway incursions**

RUNWAY INCURSIONS

- **CDG Local Runway Safety Team proposed the RWSL solution, CDG Safety Review confirmed**

- **See details on:**

http://rwsl.pildo.com/

RWSL AT CDG Airport:
Take-off Hold Lights (THL)

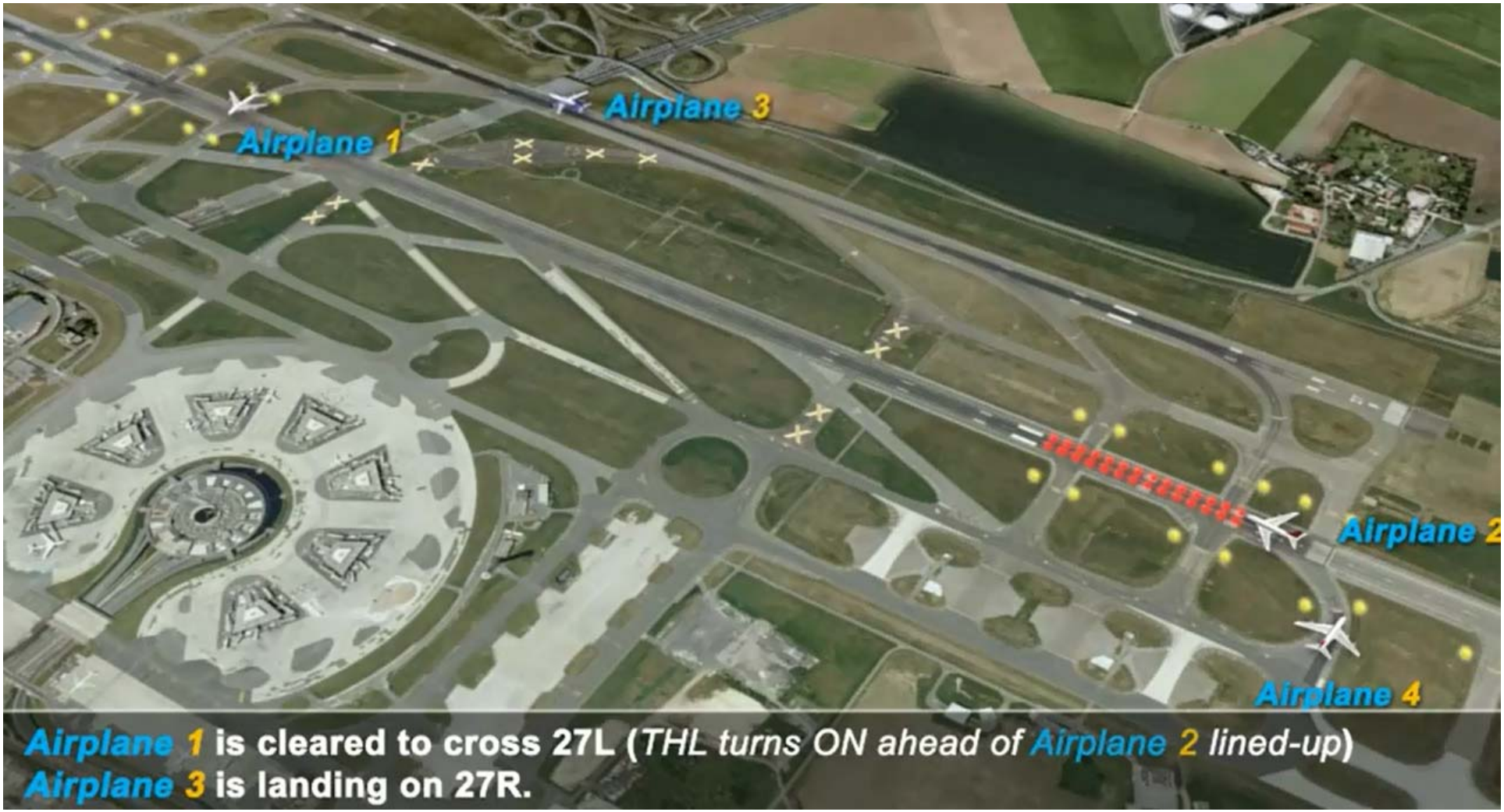

RWSL AT CDG Airport:
Runway Entrance Lights (REL)

RWSL AT CDG Airport:
Runway Entrance Lights (REL)

RWSL AT CDG AIRPORT ON INNER RWYs 09R/27L, 08L/26R

- ✓**RELs** at CAT 1 holding points (e.g.: 27L).
  LED lights on parallel architecture
- ✓**THLs** ahead of line-up taxiways used for departure.
  LED lights (red runway C/L lights - 1500cd) on 6.6A series circuit

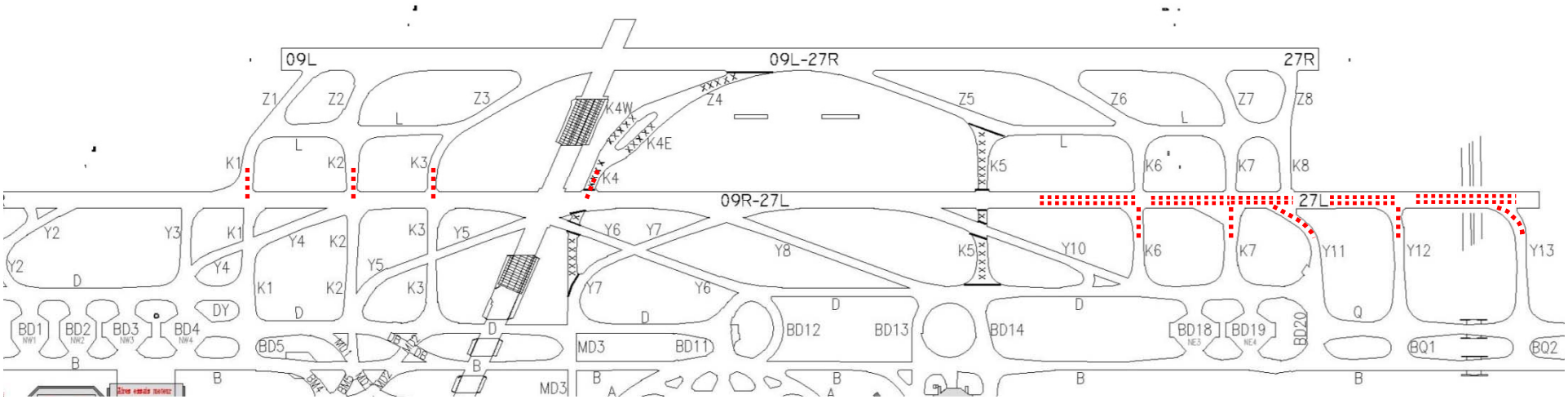

REL - Runway Entrance Lights

THL - Takeoff Hold Lights

Parallel LED Circuit – Field experience

- More than 2000 LPS/LPC lights installed in Paris CDG, starting April 2007:
  - on stop bars and lead-ons (65 stop bars)
  - as REL lights of the RWSL system
  - on de-icing areas
  - for taxiway applications
- About 45 PPCs

Parallel LED Circuit – Field experience

Parallel LED Circuit – Field experience

Parallel LED Circuit – Field experience

Parallel LED Circuit – Field experience

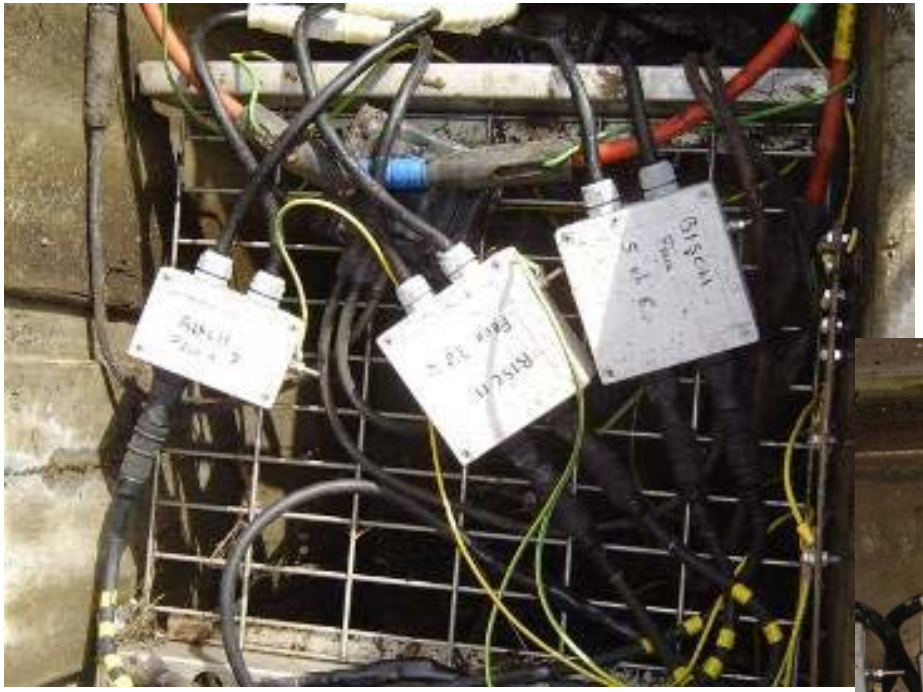

Parallel LED Circuit – Advantages

- Overall cost reduction
  - Reduced complexity of the PPC versus CCR (no regulation)
  - No need for external communication module
  - Standard 3-core cable, not specific to AGL

- Easy installation – limited costs
  - "Main trunk" takes the place of the primary loop
    Connection boxes take the place of the transformer
  - No need to change the infrastructure – existing conduits, cans (bases) or manholes (transformer pits) can be re-used
  - In CDG, no physical separation between 6.6A primary cables (red) and parallel main trunk (black)
  - No separate communication module

©2012 ADB Airfield Solutions, LLC. All Rights Reserved

Parallel LED Circuit – Advantages

- Efficiency
  - “Parallel” light uses less than 20W, compared to 30W for similar “6.6A” version
  - Average current reduced (typ. 50mA per light)
- Flexibility of the layout
  - No need for a loop - parallel supply allows “tree structure”
- Improved communication
  - No loop (= antenna) means less cross-talk
  - Communication does not have to pass through an isolation transformer (no attenuation)
- Safety
  - Voltage limited to 450V
  - Standard safety rules applicable

©2012 ADB Airfield Solutions, LLC. All Rights Reserved

Parallel LED Circuit – Disadvantages

- Maintenance familiarity
- Individual control: requires communication signal to change intensity step
  - For applications requiring no individual communication, a simple system like APS is more adapted

©2012 ADB Airfield Solutions, LLC. All Rights Reserved

ADB
Airfield Solutions

Thank you for your attention

Bruno.urbaing@adb-air.com